Increasing Output Swing in Power Operational Amplifiers

INTRODUCTION

Due to the typical circuit topologies used in the output stages of power operational amplifiers, the output voltage swing may be limited by as much as 12V less than the applied power supply voltage. The goal of this application note is to illustrate several practical techniques to drive the amplifier output closer to the rail voltages, which enables power output to increase significantly. In some applications, the output power can be increased by as much as 50%. Certain power operational amplifiers allow the user to apply a separate higher voltage supply to the input stage of the amplifier while the output stage is set to a lower voltage. This arrangement achieves close-to-rail voltage swing since the output devices, usually Enhancement Mode MOSFETs, are driven close to saturation by the higher voltage available to drive the gates. Another method to improve output voltage swing is to modify the amplifier's output stage by adding some external output components. This application note explores these approaches through the discussion of typical examples with the hope that users will create and develop circuits to meet their own specific requirements based on the techniques shown here.

GENERATING THE BOOST VOLTAGE

Many power operational amplifiers provide separate power supply pins for the input stage and output stage. This allows the user to apply a higher power supply voltage to the input circuitry than the supply voltage applied to the output stage. The voltage difference is usually between 5V and 15V. This enables the output devices to be driven close to their saturation. If this increased voltage swing is not needed, then the input and output power supply pins are connected together providing equal supply voltage to the input and output stages. As an example, the Apex Microtechnology MP39 power operational amplifier[1], depicted in Figure 1, has separate pins for V_B, the input stage supply voltage, and V_S, the output stage supply voltage, so that the designer can tie them together or power them separately, as outlined below.

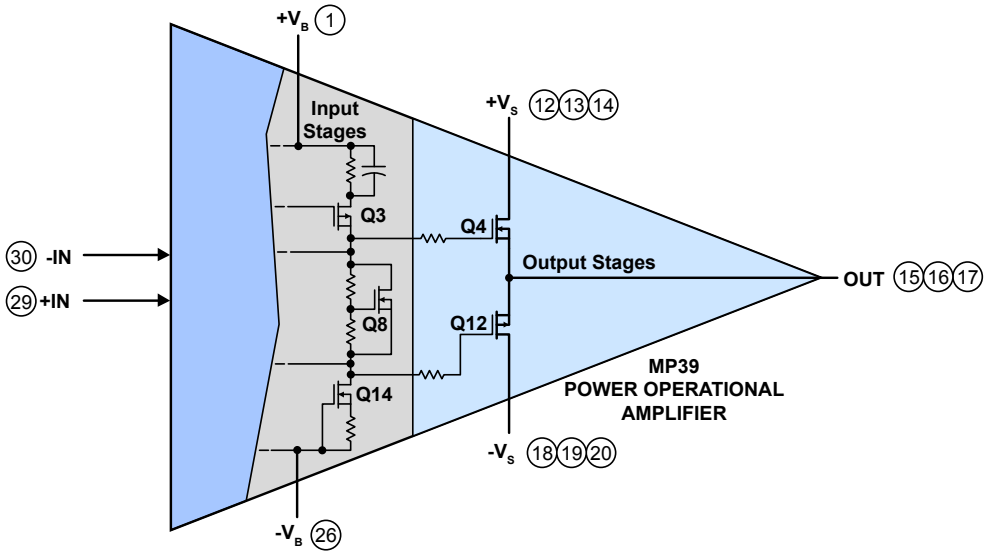

Figure 1. V_B and V_S are Separate — Because the DC power inputs for the input stage ($\pm V_B$) are separated from the output stage ($\pm V_S$) in the MP39, the designer has the option of applying higher potential to each V_B terminal, thereby allowing the output voltage to swing closer to the rail potentials ($\pm V_S$).

The Q4 and Q12 MOSFETs deliver a maximum output current of 10A to the load. In most applications, $+V_B$ and $+V_S$ are connected together. Since Q4 is an enhancement mode device, the gate voltage must be at least 10V higher than the source voltage to achieve the lowest source to drain voltage. In the case of Q12, the gate voltage must be 10V lower. This means the maximum output voltage, at full output current, will be at least 10V lower than V_S. By applying a higher voltage to V_B, the Q4 gate voltage is driven to a higher potential than V_S, forcing a higher Q4 source voltage. As indicated in the MP39 data sheet, the absolute maximum boost voltage, V_B, is specified at 20V higher than V_S and the maximum boost supply current is 22mA.

For applications requiring an output current of less than 500mA, a 10V to 15V zener diode placed between V_B and V_S may be adequate. In this configuration the power supply voltage would be connected to the V_B pin. This will automatically force the V_S input 10V to 15V lower than V_B. If this approach is followed, all of the output current would flow through the zener diode which would have to dissipate the resulting power. This is a simple solution, but not very practical because the MP39 can deliver output currents of up to 10A.

EMPLOYING ISOLATED DC-TO-DC CONVERTERS

Isolated DC-to-DC converters may be used to supply the boost voltage. There are many commercially available converters that are suitable for providing the boost voltage. A pair of CALEX 3W modules have been selected (available in either surface mount or through-hole configurations). The 48V input version offers an input voltage range from 36V to 72V and an isolated, regulated output of 12V. Two modules are required, one for the $+V_B$ and one for the $–V_B$. Our testing was performed with V_S set at 40V. One module was powered from the +40V supply ($+V_S$) and the other module was powered from the -40V supply ($-V_S$). Since the outputs are isolated, other input power supply arrangements could be used, as long as the supply voltages are within the module's operating input range. In the configuration depicted in Figure 2, the voltage potential between the $+V_B$ and the $–V_B$ terminals is 52V.

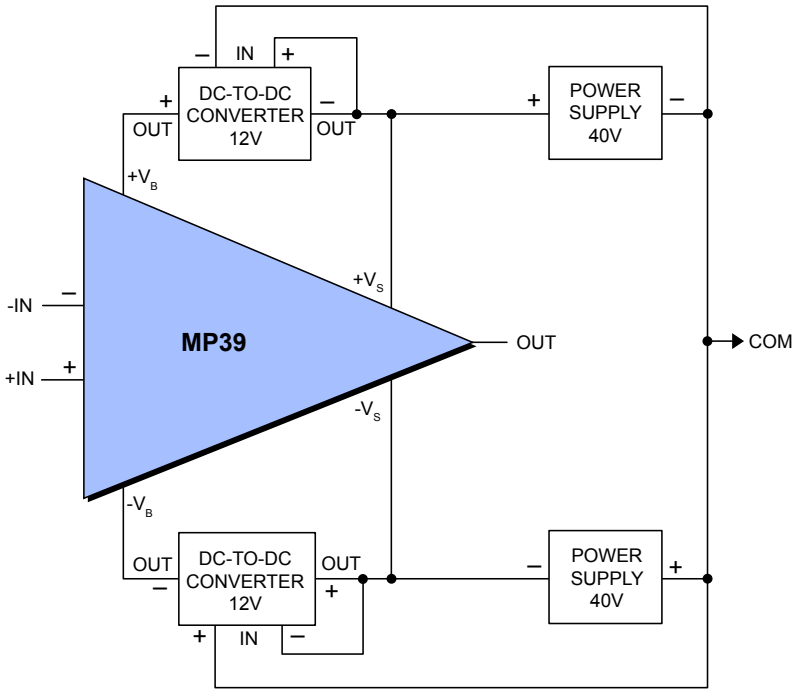

Figure 2. Obtaining the Boost

A pair of DC-to-DC converters connected as shown in Figure 2, are powered by the 40V power supplies that also provide the V_S voltages. The output of the DC-to-DC converters is connected between the V_S and V_B of the power operational amplifier terminals providing the required boost voltage. To maintain a balanced load across the power supplies, the output of one converter is connected in series with $+V_S$ supply and common, and the second converter between $–V_B$ and $–V_S$. The outputs are isolated so any convenient power sources can be applied as long as the total voltage applied to $–V_B$ and $+V_B$ does not exceed the specified input range.

DC-TO-DC CONVERTERS FROM OFF-THE-SHELF COMPONENTS

A low cost DC-to-DC converter can be assembled using off-the-shelf components commonly available through common catalog distributors. The schematic circuit diagram is shown in Figure 3. This converter was designed for the specific purpose of providing the V_{BOOST} for any Apex Microtechnology power operational amplifier featuring separate power pins for the input and the power stages.

Note that the transformers T1, T2 and Inductor L1 are Coiltronics part numbers available from Cooper Bussman.

Because the two outputs are totally independent, a single converter will supply both the plus and minus V_{BOOST}. The input voltage range is specified from 20V to 100V allowing additional flexibility. The converter's switching frequency is approximately 20kHz and exhibits very low radiated and conducted noise components, assuming the circuit lay-

out and ground scheme are given careful attention. Transformer L1 is a common mode filter that rejects common mode noise due to the switching that occurs in the Timer X1, preventing it from feeding back to the V_S source voltage. The snubber circuit, consisting of Capacitor C13 and Resistor R11, counteracts ringing that would other wise occur in Transformers T1 and T2.

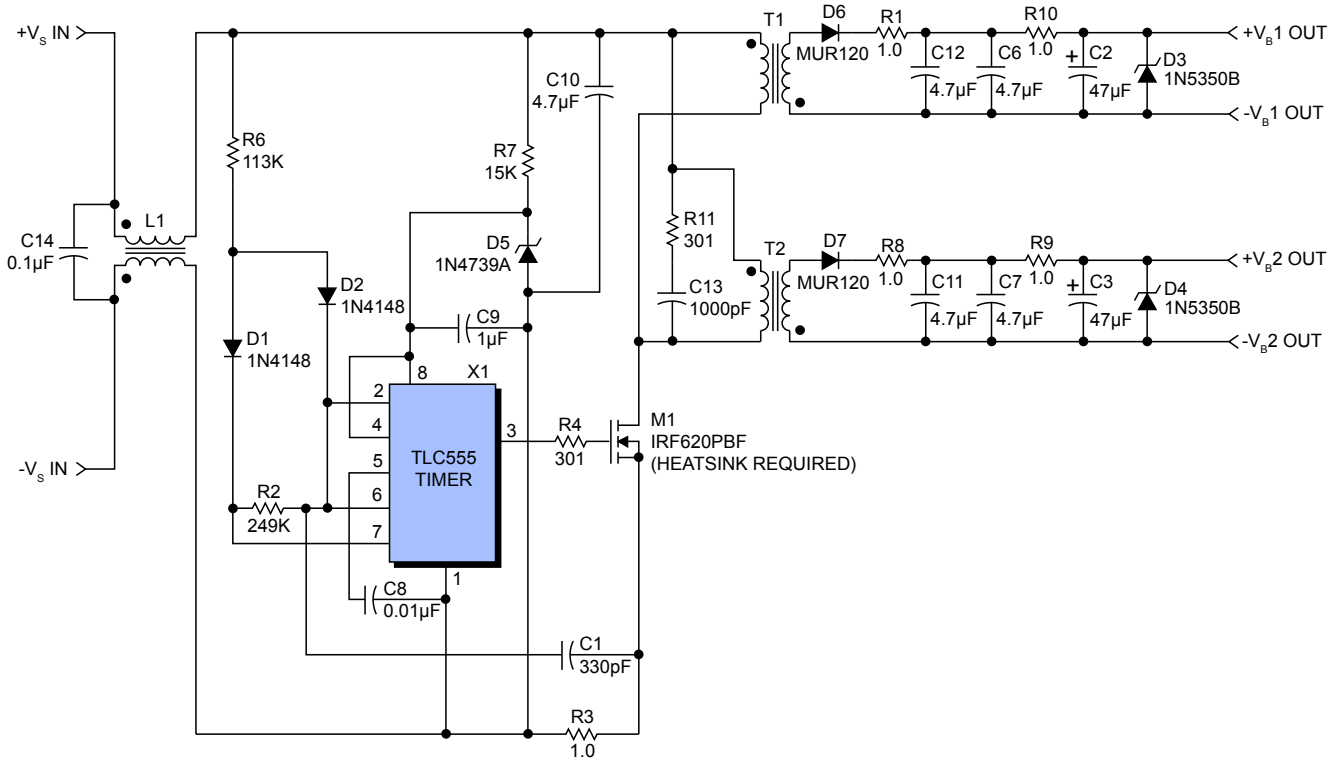

Figure 3. A Low-Cost DC-to-DC Converter — This converter can be employed to supply the boost voltages ($+V_B$ and $-V_B$) necessary to increase the output swing.

Table 1. Parts List for DC to DC Converter Circuit Shown in Figure 3

REFERENCE DESIGNATION	DESCRIPTION	PART NUMBER (DIGI-KEY)
C11, C12,C6,C7	CAPACITOR, X7R CERAMIC, 4.7µF, 25V, TDK	445-2886-ND
C1	CAPACITOR, COG CERAMIC, 330pF, 50V, MURATA	490-3724-ND
C2, C3	CAPACITOR, TANTALUM, 47µF, 25V, AVX, TAP476K025CCS	478-4181-ND
C8	CAPACITOR, X7R CERAMIC, 0.01µF, 100V, MURATA	490-3813-ND
C9	CAPACITOR, X7R CERAMIC, 1.0µF, 50V, TDK	445-2884-ND
C10	CAPACITOR, POLY FILM, 4.7µF, 250V, PANASONIC	EF2475-ND
C13	CAPACITOR, X7R CERAMIC, 1000pF, 200V, KEMET	399-4323-ND
C14	CAPACITOR, X7R CERAMIC, 0.1µF, 200V, KEMET	399-4387-ND
D1, D2	1N4148, DIODE, OR EQUIVALENT	
D3, D4	1N5350, 13V ZENER DIODE, 5W, ON SEMI	1N5350BRLGOSCT-ND
D5	1N4739, 9.1V ZENER DIODE, 1W, ON SEMI	1N4739ADICT-ND
D6, D7	MUR120, ULTRA FAST RECOVERY, RECTIFIER, ON SEMI	MUR120RLGOSCT-ND
D5	1N4739, 9.1V ZENER DIODE, 1W, ON SEMI	1N4739ADICT-ND
L1	100 µH CHOKE, COILTRONICS, DRQ-73-101-R	513-1251-1-ND
M1	IRF620PBF, MOSFET, 200V, 5.2A, VISHAY, IR	IRF620PBF-ND
R1,R3,R8,R9,R10	RESISTOR, FILM, 1.0Ω, 1W	
R2	RESISTOR, FILM, 249KΩ, 1%, 0.25W	

REFERENCE DESIGNATION	DESCRIPTION	PART NUMBER (DIGI-KEY)
R4, R11	RESISTOR, FILM, 301Ω, 1%. 0.25W	
R6	RESISTOR, FILM, 113KΩ, 1%, 0.25W	
R7	RESISTOR, FILM, 15KΩ, 1W	
T1, T2	100 µH CHOKE, COILTRONICS, DRQ-127-101-R	513-1314-1-ND
X1	TLC555 TIMER, I.C., TI	296-1857-5-ND

SAMPLE TEST CIRCUIT – A 200W POWER OPERATIONAL AMPLIFIER DRIVING AN 8Ω RESISTIVE LOAD

In this example an MP39 power operational amplifier is configured as an inverting amplifier with a gain of 5 and driving a resistive load of 8Ω, as depicted in Figure 4. The value of the compensation capacitor C_C, 220pf, complies with the recommendation specified in the MP39 data sheet for a gain of 3 or more, and less than 10. The power supply voltage, V_S, is set to ±40V. The boost voltages, $+V_B$ and $–V_B$, are set at 12V. The power delivered to the load is 200W PEAK with the boost voltage applied, and 144W PEAK with no boost voltage. This significant increase in realized power can be important in high-efficiency applications. The MP39 datasheet limit for output voltage swing is $±V_S$ ±8.8V. This means clipping could occur at 31.2V without the boost voltage.

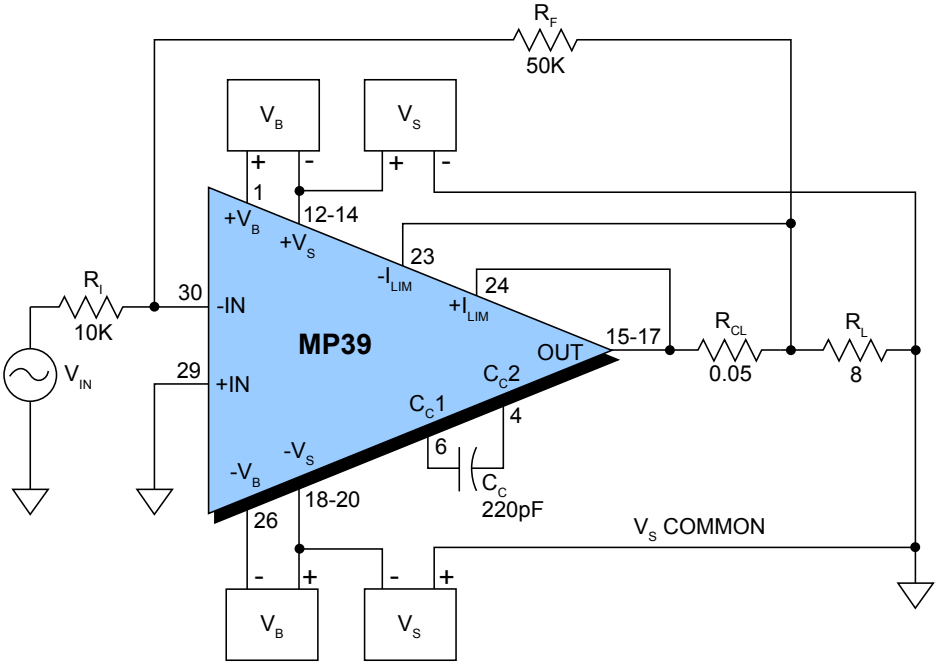

Figure 4. Test Circuit — This circuit with an inverting gain of 5, V_B of 12V and V_S of 40V, was used to obtain the plots in Figures 5 and Figures 6.

The waveforms shown below in Figure 5 depict the output without the boost circuits — the V_B terminals are tied to the V_S terminals. Note that clipping of the output waveform occurs at +34V and –34V respectively, because the output can be driven no higher. However, with the addition of boost circuits with potentials of 12V, the output is able to swing all the way to the supply rails, as depicted in Figure 6.

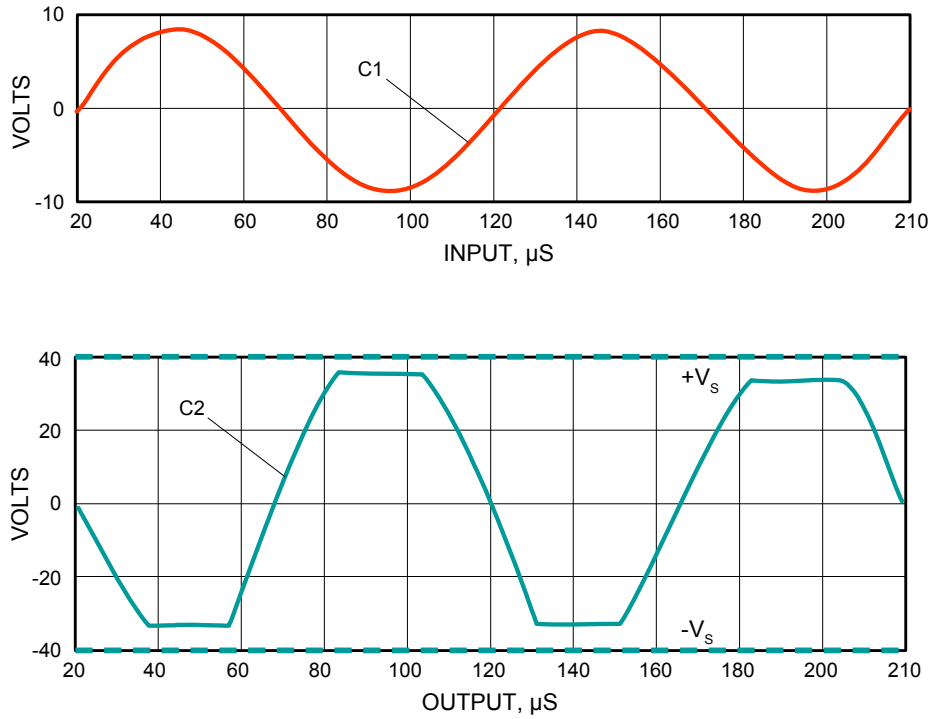

Figure 5. Without a Boost Circuit — With the V_B boost terminals tied to the V_S terminals the output voltages are clipped at ±34V. Consequently, the output swing is unable to reach the supply rails at +40V and – 40V, respectively. In this configuration the amplifier can only deliver 144W PEAK.

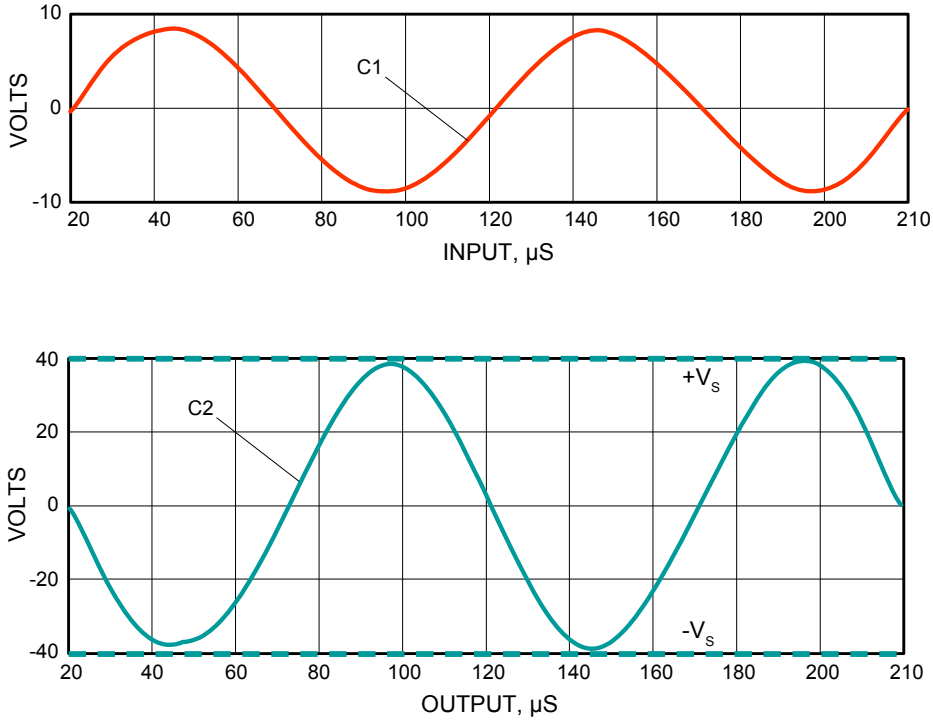

Figure 6. With a Boost Circuit — With the addition of $+V_B$ and $-V_B$ boost circuits, the output is able to swing all the way to the rail potentials at V_S and $-V_S$, respectively. The amplifier in this configuration is able to deliver 200W PEAK – approximately 39% more power than when the amplifier operates without the boost circuits.

MODIFICATION OF THE OUTPUT STAGE CAN IMPROVE OUTPUT VOLTAGE SWING

Shown in Figure 7 is a circuit based on the Apex Microtechnology PA96 power operational amplifier[2] operating with power supply voltages of ±40V. Resistors R3 and R4 are selected so that the maximum quiescent current creates a voltage drop of approximately 0.5V to 0.6V across the base-to-emitter junctions of Q1 and Q2. This keeps the output transistors from turning on and conducting collector current when the output voltage is near zero. Resistors R5 and R6 are selected to provide sufficient base current to Q1 and Q2 as the output voltage approaches the rail allowing Q1 and Q2 to pull the output closer to the supplies. A note of caution: although the power operational amplifier is current limit protected, the output transistors (Q1 and Q2) have no overcurrent protection and will be damaged if their SOA (Safe Operating Area) requirements are exceeded.

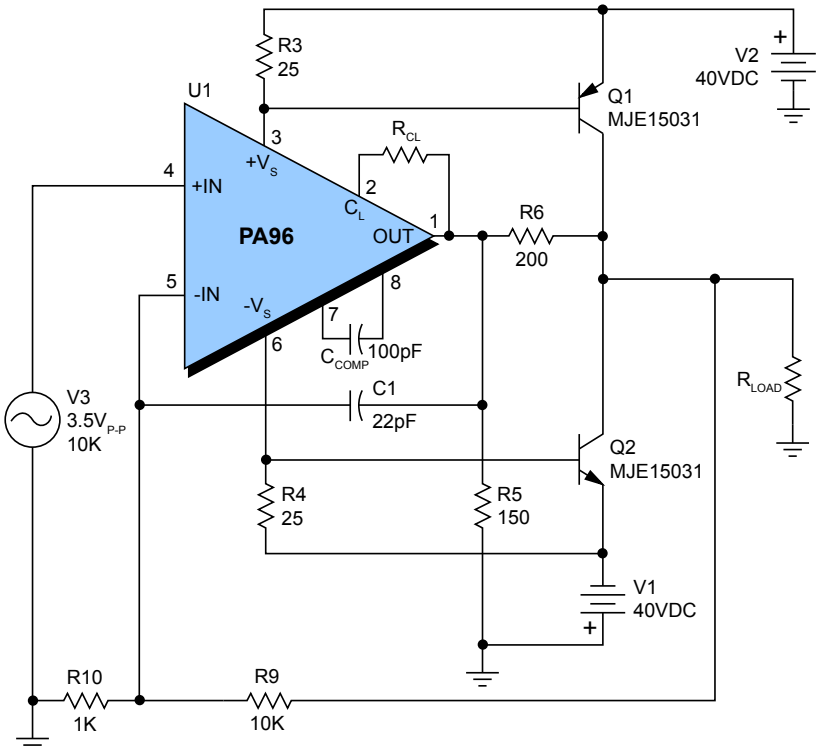

Figure 7. Composite Power Amplifier — A PA96 operational amplifier with additional output transistors, Q1 and Q2, and resistors R3, R4, R5, and R6. This modification creates a composite operational amplifier with extended output voltage swing.

Figure 8 below depicts how the circuit in Figure 7 reacts when resistors R3, R4, R5, and R6 are not used showing the circuit's output clipping. Figure 9 illustrates how the same circuit behaves when the three resistors have been added. Clipping no longer occurs.

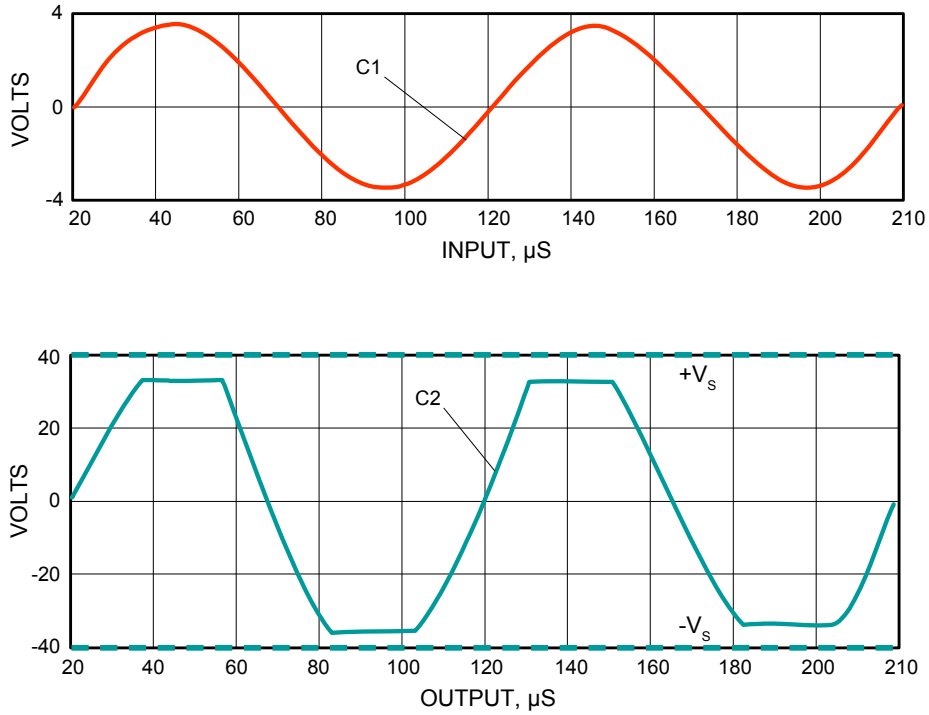

Figure 8. Composite Amplifier *without* Modifications

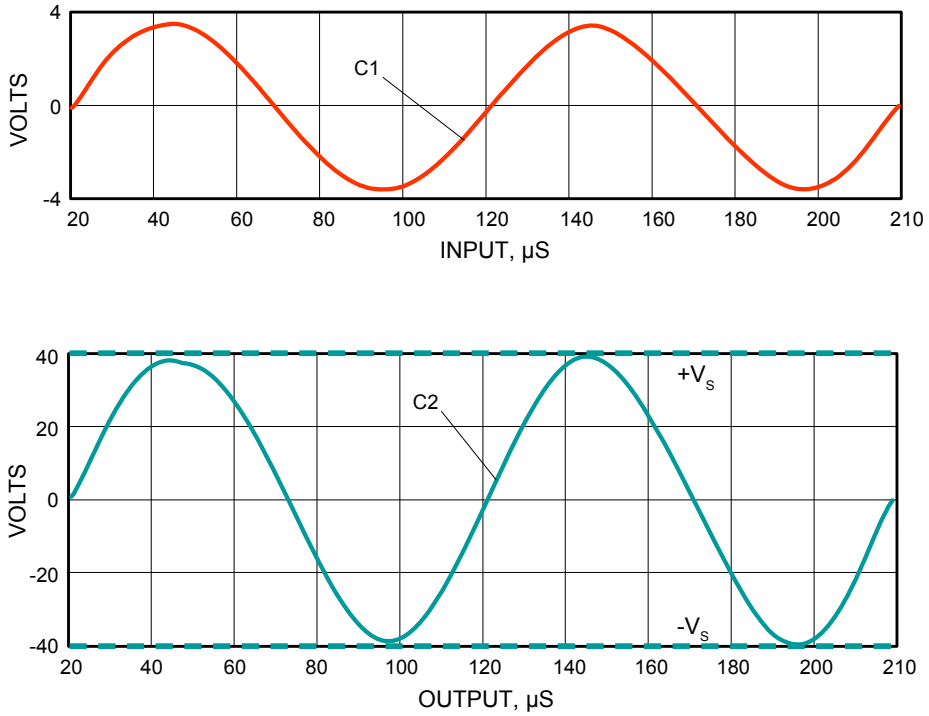

Figure 9. Composite Amplifier *with* Modifications

MAINTAINING LINEAR PERFORMANCE WITH OUTPUT VOLTAGES APPROACHING THE NEGATIVE RAIL

The circuit shown in Figure 10 accepts input voltage levels, including zero, and can deliver output voltages from zero to 10V with a single ended 18V power supply. The Apex Microtechnology PA75 dual power operational amplifier[3] is used because the input voltage range includes the negative supply voltage. However, the PA75 output voltage does not swing very near to the rails. The PA75 consists of two operational amplifiers. One is pre-configured as a unity gain buffer, while the other can have its gain programmed and is employed in this circuit. This example enables the output voltage to drive a grounded load to zero volts. Diode D2 must be a low leakage zener diode for the circuit to function. Since the output voltage of the PA75 never reaches zero volts, any leakage current flows through the load resistor causing a non-zero voltage at the load. The feedback loop cannot correct for this once the output reaches it's minimum voltage. Notice the plot of Figure 11. The output response is quite linear with respect to the input from zero to 10V.

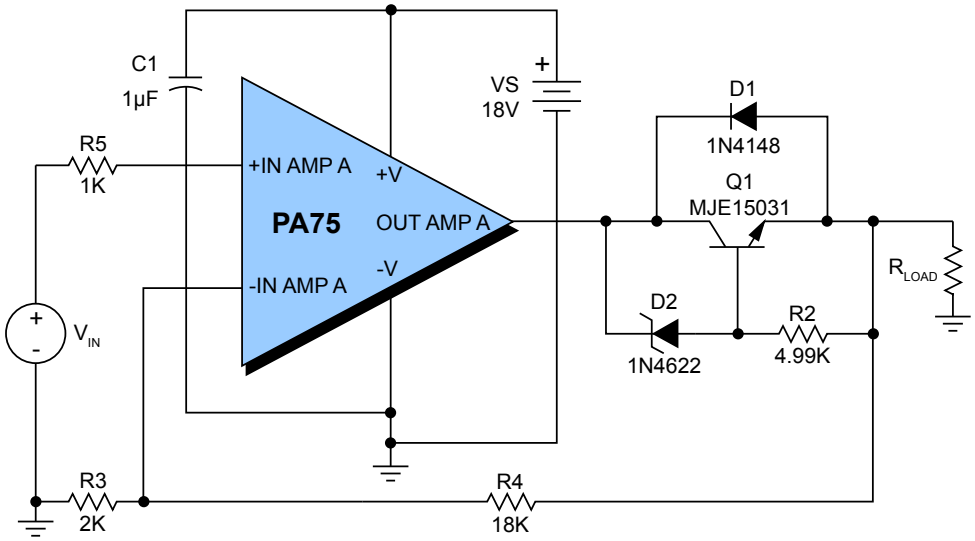

Figure 10. Single Ended Operation Delivering Output from Zero to 10V

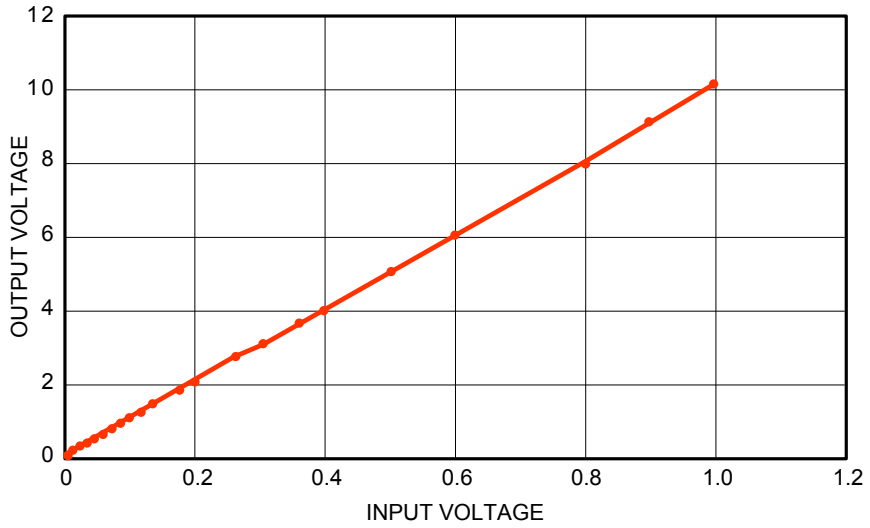

Figure 11. Output Response of the Circuit in Figure 10

CONCLUSIONS

Several methods for extending the output voltage swing of power operational amplifiers have been described. The circuits included in this application note have been developed and tested. The schematics may not include all components such as by-pass capacitors, resistors and diodes needed for a complete design. Circuit layout has not been addressed and is critical for all circuit configurations using Apex Microtechnology products. The test results shown are based on the typical performance of a specific device used in each application. The differences in performance shown, with and without the modifications, will be more dramatic when compared to minimum voltage swing data sheet limits. For additional information concerning the use of power operational amplifiers with regard to stability, thermal management, device protection, and other topics, please refer to the relevant Application Note[4].

References

1. *MP39 Power Operational Amplifier* Data Sheet, Apex Microtechnology.
2. *PA96 Power Operational Amplifier* Data Sheet, Apex Microtechnology.
3. *PA75 Dual Power Amplifiers* Data Sheet, Apex Microtechnology.
4. *Techniques for Stabilizing Power Operational Amplifiers*, Application Note 47, Apex Microtechnology

NEED TECHNICAL HELP? CONTACT APEX SUPPORT!

For all Apex Microtechnology product questions and inquiries, call toll free 800-546-2739 in North America.
For inquiries via email, please contact apex.support@apexanalog.com.
International customers can also request support by contacting their local Apex Microtechnology Sales Representative.
To find the one nearest to you, go to www.apexanalog.com