Tech Alert

Replacing PA78DK with PA79DK in Existing Applications

It is possible that the PA79DK can be used in place of the PA78DK, however PCB layout is critical and considerations must be taken.

These devices offer identical form factors and both utilize the same 20 PIN PSOP package (Apex's 'DK' package designation), have the same specifications, and are similarly behaved, with the only effective difference being that the PA79DK is a dual channel amplifier while the PA78DK is a single channel amplifier. The PA78DK's pinout is identical to the PA79DK's "A" channel pinout, but the unconnected pins (pins 6 through 15) on PA78DK are used for the PA79DK's "B" channel as illustrated in **Figure 1.** below:

Figure 1

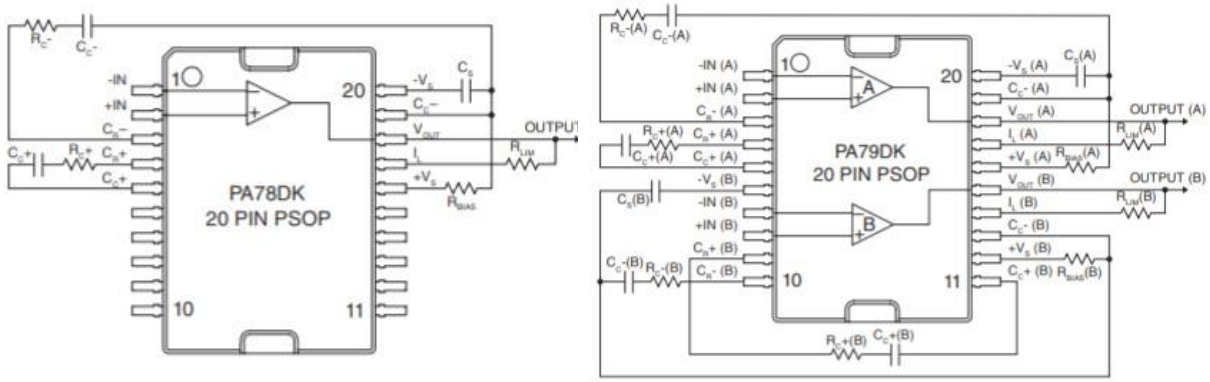

Apex recommends that a PA79DK can be used in place of a PA78DK in applications where pins 6 through 15 are not connected to any power or signal traces on the PCB layout and are either floating or connected to ground.

Apex cannot guarantee that the PA79DK will function identically to the PA78DK in all applications. We must recommend that each end-user perform adequate due diligence when evaluating this replacement option; thoroughly reviewing the electrical and thermal performance of the replacement device in their circuit to match the specific application requirements and to confirm that this replacement is suitable for the end application in question.

The Apex Applications Engineering team is standing by to support any related technical questions, to assist in circuit performance evaluation, and to provide design/layout recommendations related to the use of PA79DK in applications currently using PA78DK.

NEED TECHNICAL HELP? CONTACT APEX SUPPORT!

For all Apex Microtechnology product questions and inquiries, call toll free 800-546-2739 in North America. For inquiries via email, please contact apex.support@apexanalog.com. International customers can also request support by contacting their local Apex Microtechnology Sales Representative. To find the one nearest to you, go to www.apexanalog.com